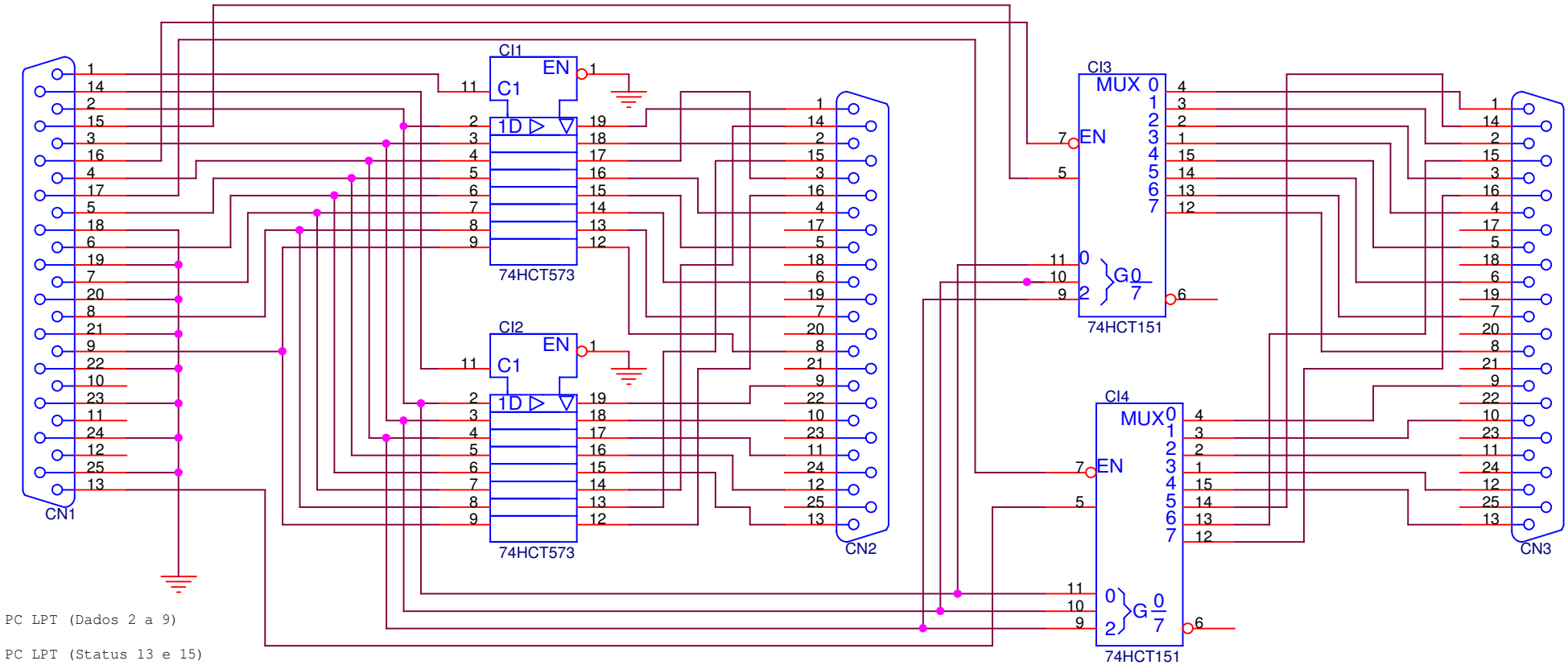

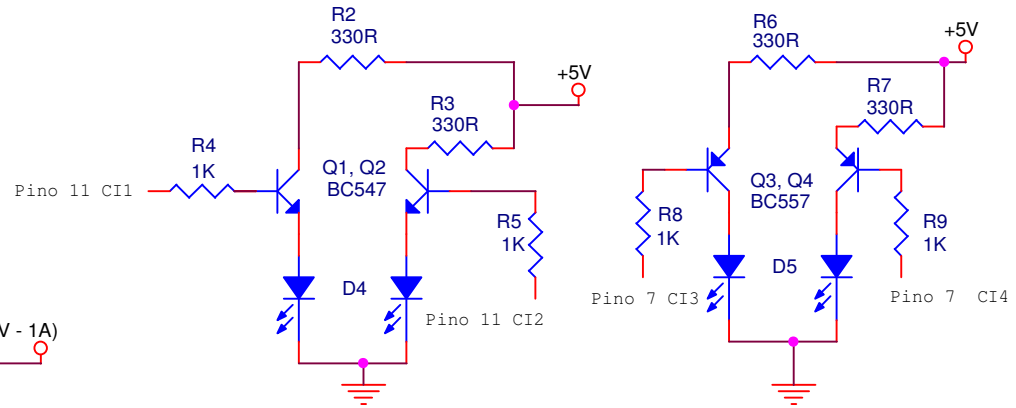

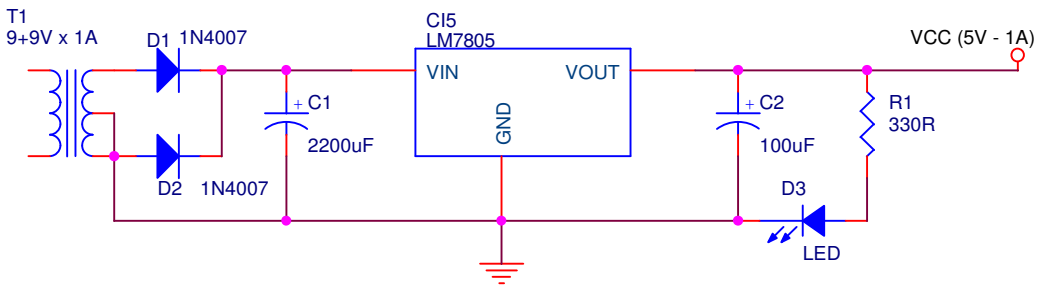

Márcio José Soares		
Title: Multiplicador para LPT - Controle para Casa Inteligente		
Size: A	Document Number: V 1.0	Rev: 1.0
Date: Wednesday, April 27, 2005	Sheet 1 of 1	