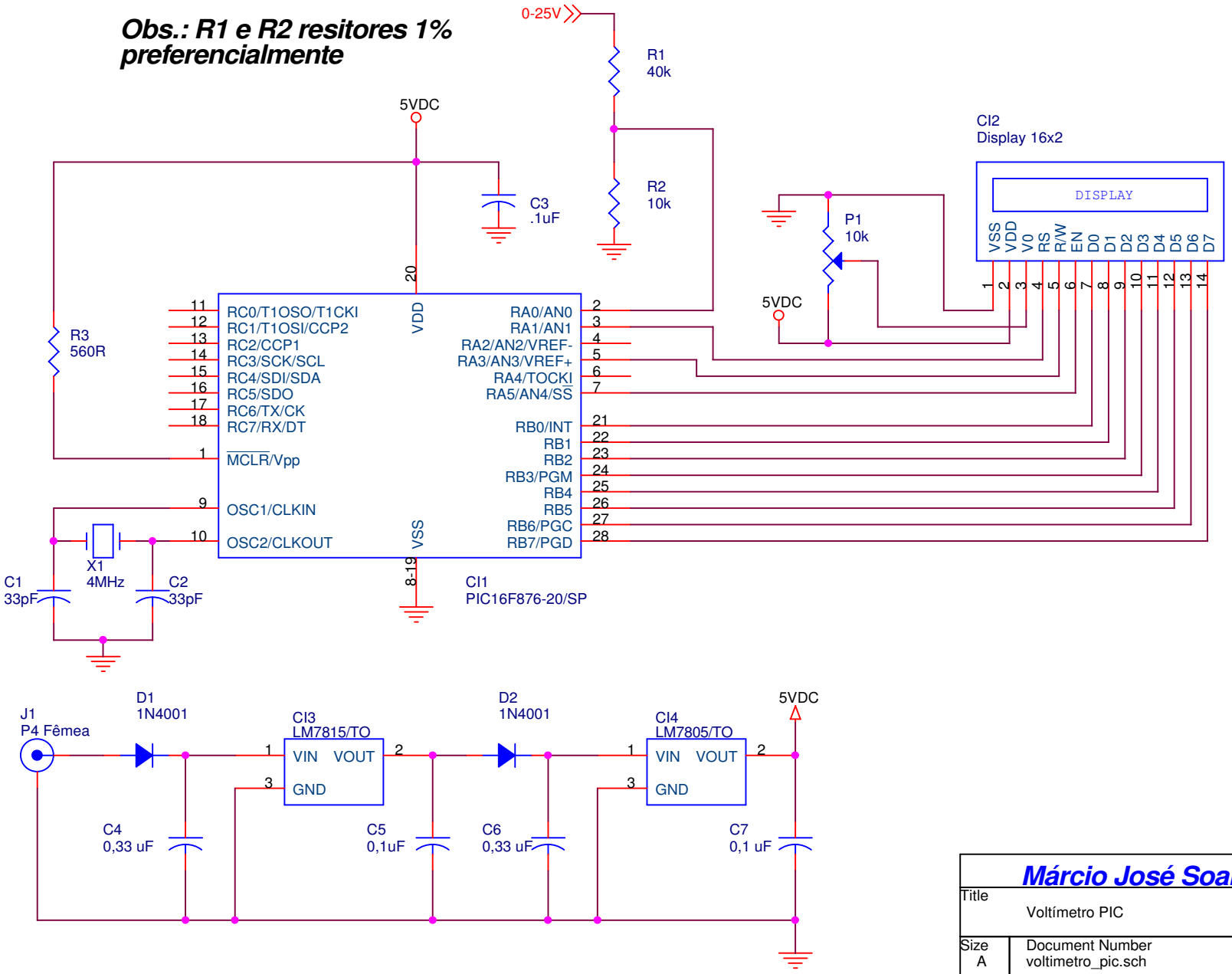

Márcio José Soares		
Title: Voltímetro PIC		
Size: A	Document Number: voltimetro_pic.sch	Rev: 1.0
Date: Monday, September 06, 2004	Sheet 1 of 1	