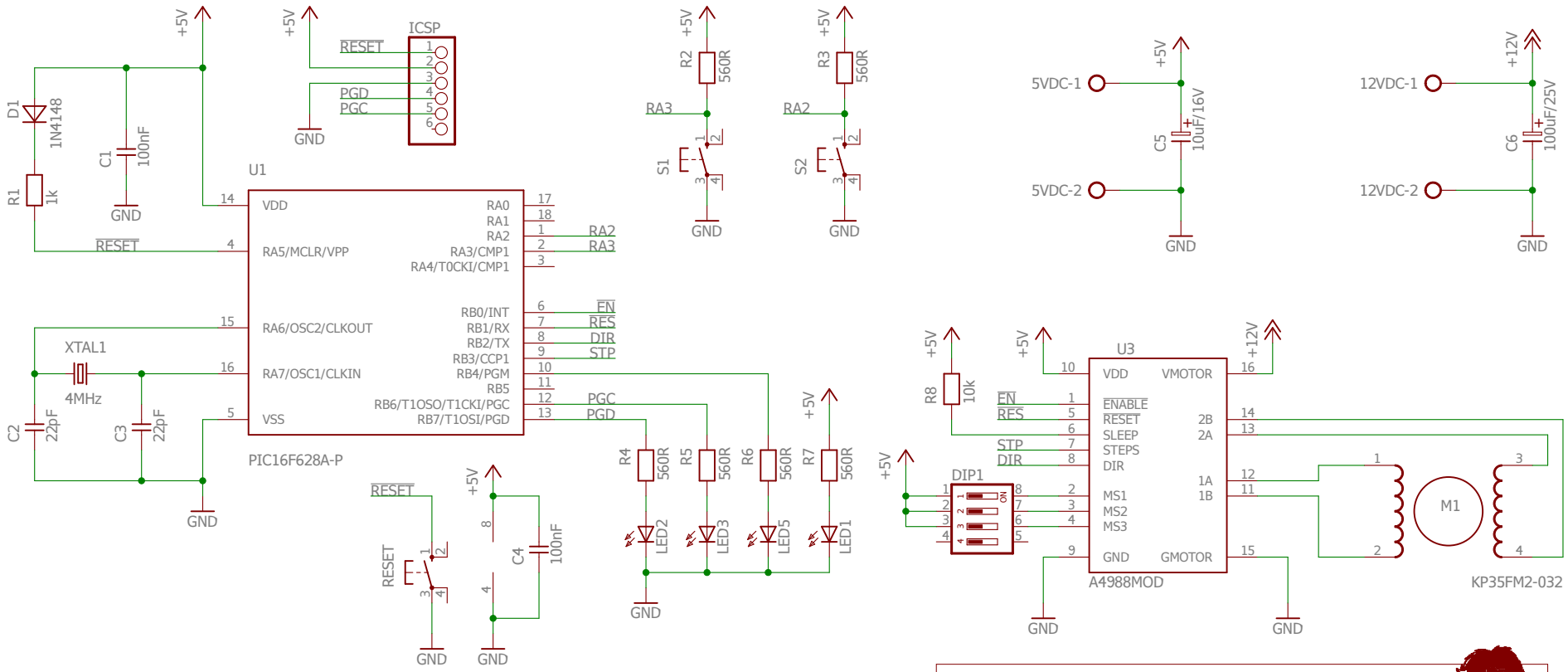

Eng. Marcio Jose Soares

TITLE: PIC_A4988	
Document Number:	REV: 1.0
Date: 14/12/2025 15:30	Sheet: 1/1