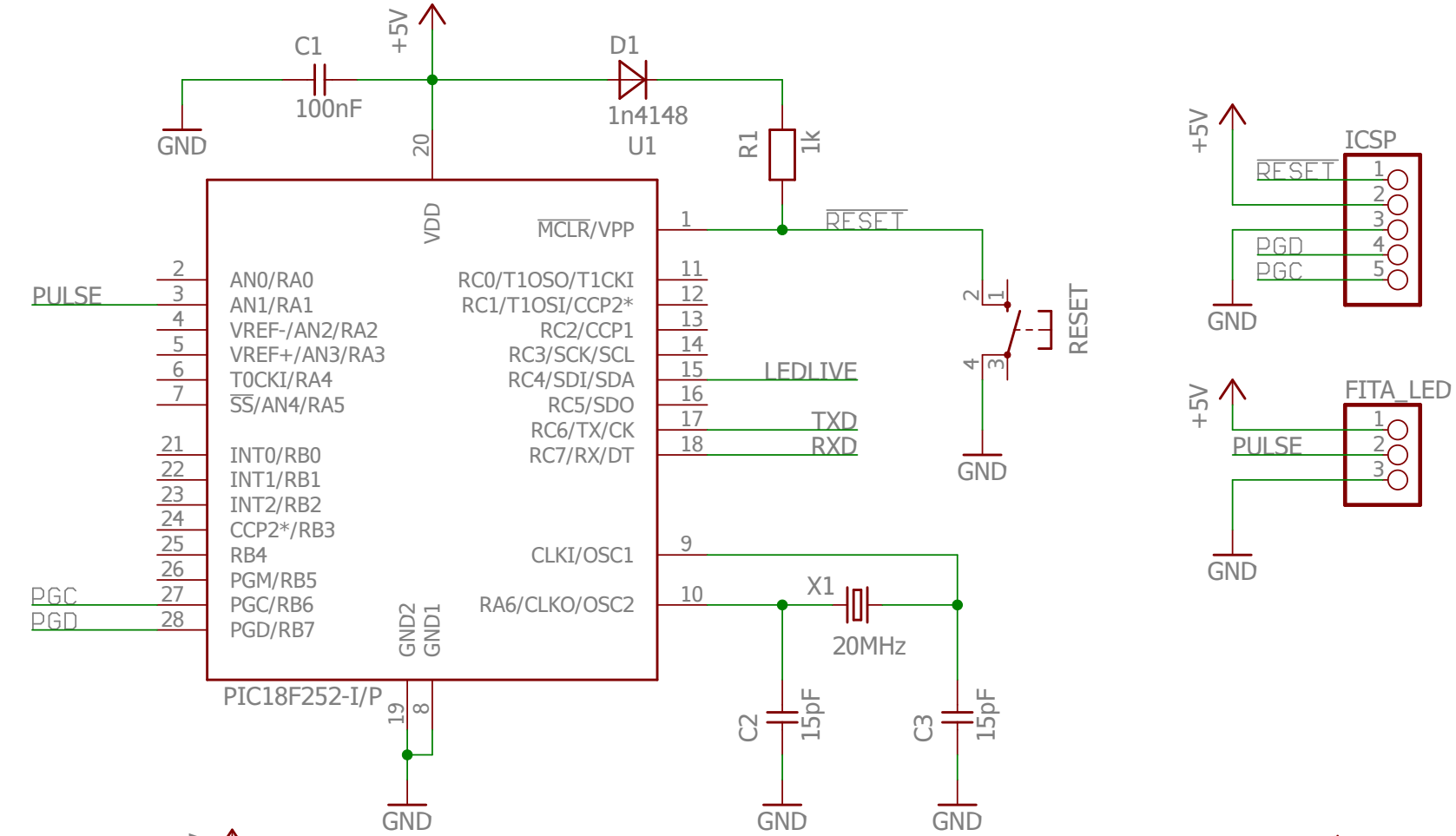

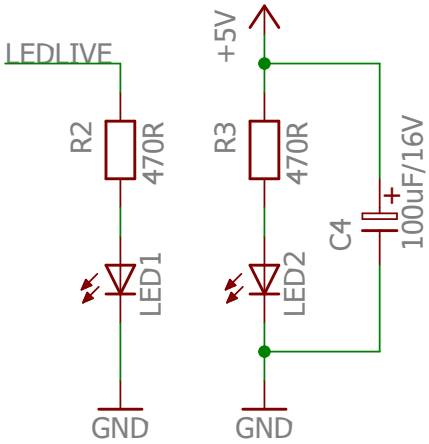

Eng. Marcio Jose Soares

TITLE: PIC_disp7seg_WS2812	
Document Number:	REV: 1.0
Date: 04/09/2025 13:02	Sheet: 1/1